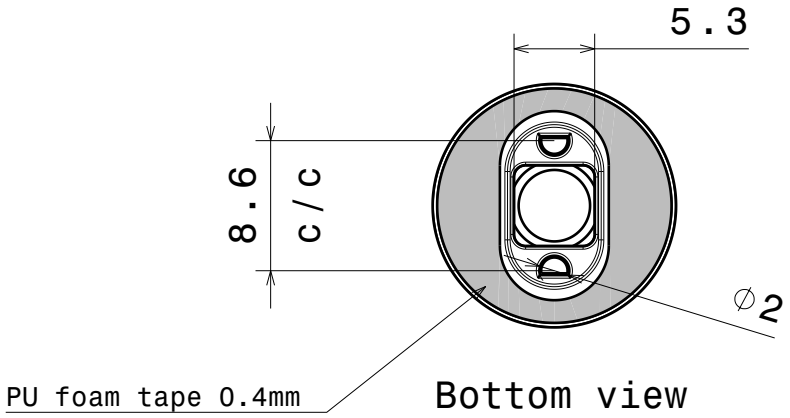

Bottom view

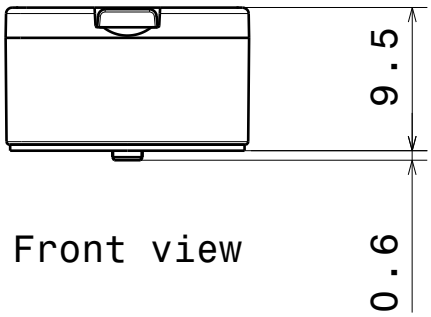

Front view

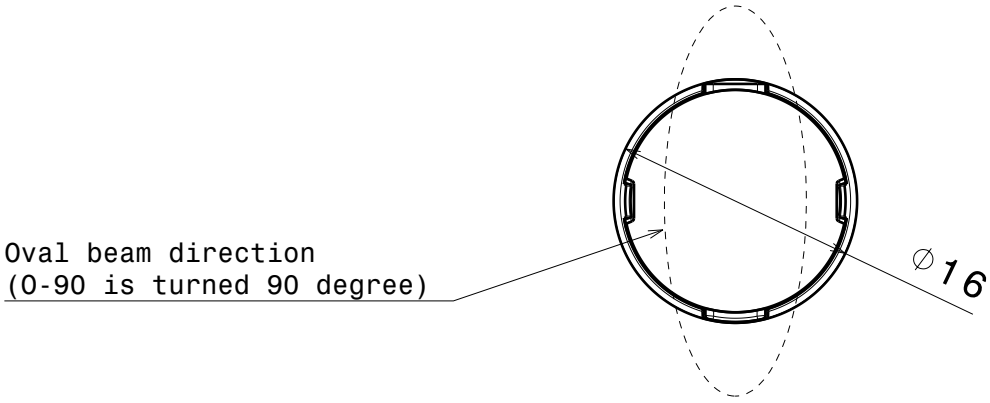

Top view

INDEX	PART NO	DESCRIPTION	MATERIAL	COLOUR
1	C12372	TINA2-HLD-BLK	PC	black
2	-	TINA2-XP lens	PMMA	

Tolerances if not otherwise shown
According to DIN ISO 2768-1
Linear measures:
Up to 30mm class M, otherwise class C.
According to DIN ISO 2768-2
Form and position: class L

Ledil Oy
Salorankatu 10
FIN 24240 SALO
Finland

THIRD ANGLE PROJECTION:

DRAWING TITLE

TINA2-XP series

SIZE A4

PART NUMBER -

SCALE 1:1 | WEIGHT 1,7 g | SHEET 1/1